Diagrama sin REP

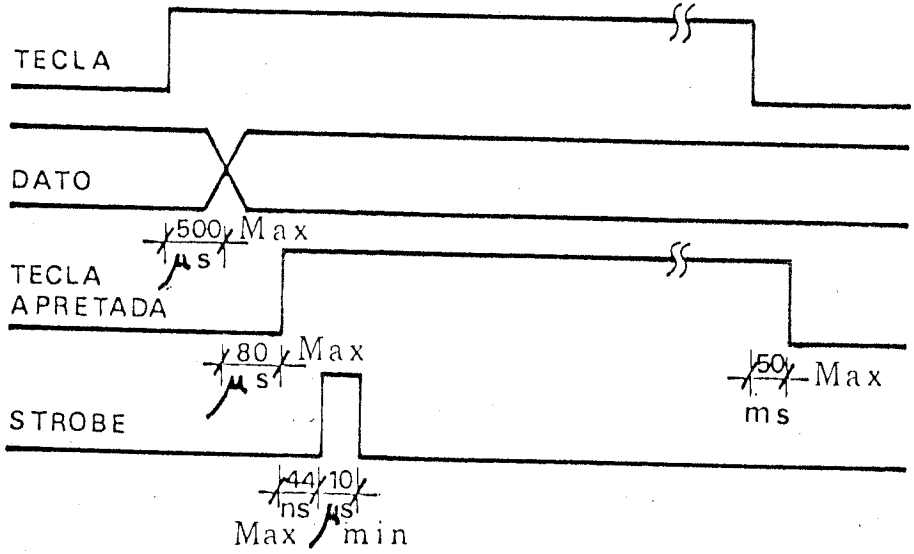

Diagrama con REP

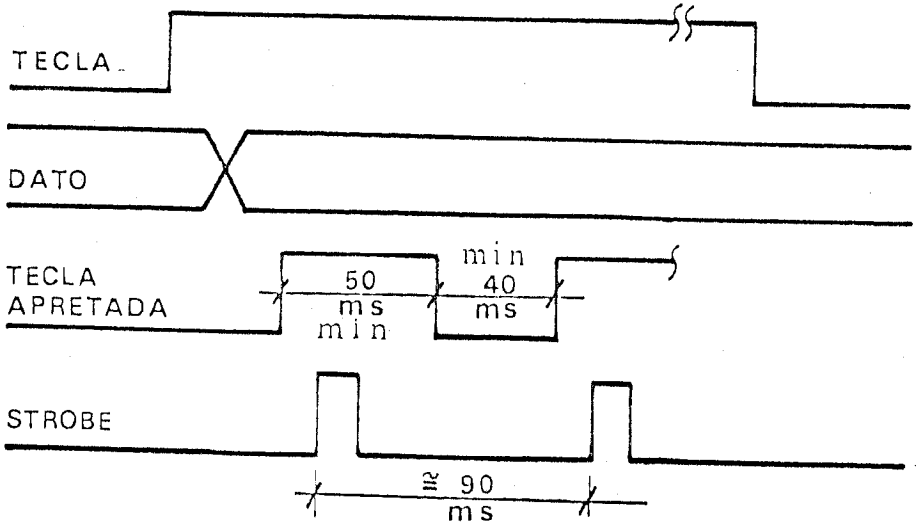

PIN	DESCRIPCION
1	GND
2	+5V
3	GND
4	+5V
5	GND
6	+5V
7	NC
8	NC
9	NC
10	$\overline{OE}$
11	NC
12	KEY PRESSED
13	NC
14	TECLA I
15	NC
16	TECLA II
17	NC
18	TECLA III
19	NC
20	NC
21	NC
22	TECLA DE "STOP"
23	NC
24	D 7
25	NC
26	D 6
27	NC
28	D 5
29	NC
30	D 4
31	NC
32	NC
33	STROBE
34	TECLA DE "START"
35	D 0
36	D 3
37	D 1
38	D 2
39	NC
40	NC

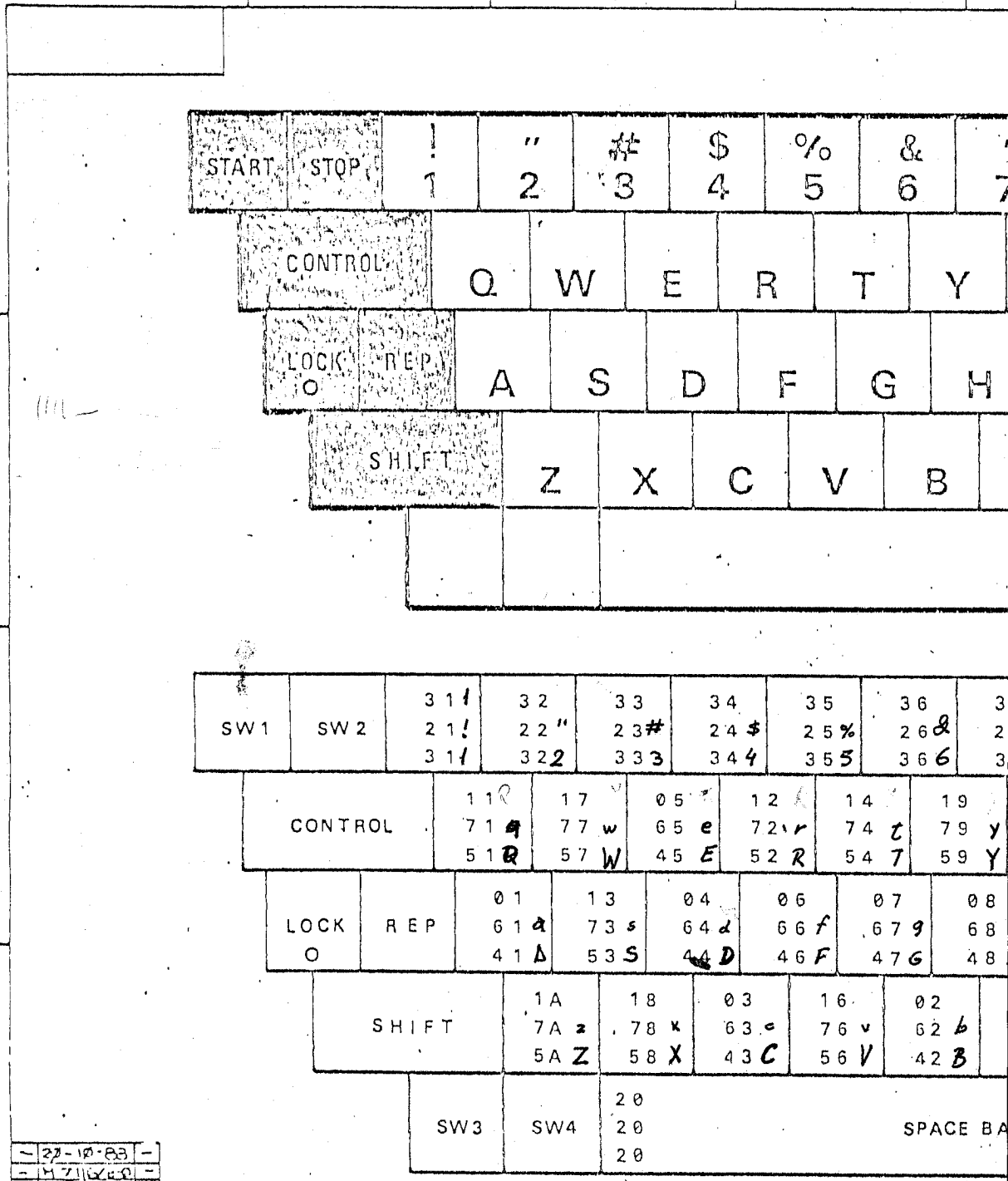

8 | 7 | 6 | 5

D

START	STOP	! 1	" 2	# 3	$ 4	% 5	& 6	7

CONTROL	Q	W	E	R	T	Y

LOCK O	REP	A	S	D	F	G	H

C

SHIFT	Z	X	C	V	B

B

SW1	SW2	31 1 21 ! 31 1	32 22 " 32 2	33 23 # 33 3	34 24 $ 34 4	35 25 % 35 5	36 26 & 36 6	3 2 3

CONTROL	11 R 71 q 51 Q	17 77 w 57 W	05 65 e 45 E	12 72 r 52 R	14 74 t 54 T	19 79 y 59 Y

LOCK O	REP	01 61 a 41 A	13 73 s 53 S	04 64 d 44 D	06 66 f 46 F	07 67 g 47 G	08 68 48

A

SHIFT	1A 7A z 5A Z	18 78 x 58 X	03 63 c 43 C	16 76 v 56 V	02 62 b 42 B

SW3	SW4	20 20 20	SPACE BA

–	27-10-83	–
–	M 7116	–
	6774	

LETRA Ñ (5C)h

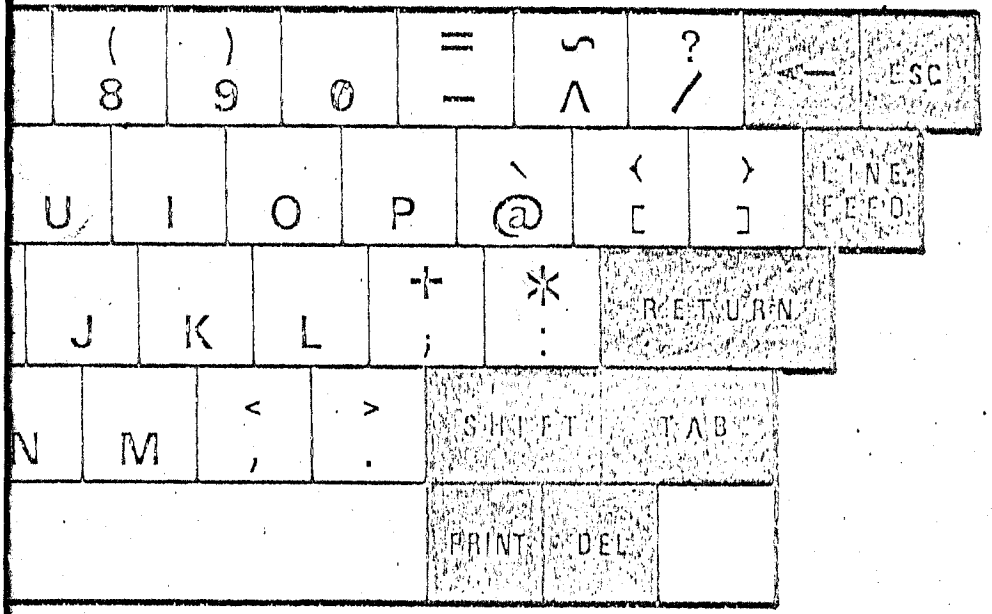

7	38	39	30	2D	1E	2F	08	1B
7 '	28 (	29)	00 ¿	3D =	,7E ~	3F ?	08 ←	1B
77	38 8	39 9	30 ø	2D -	5E ^	2F /	08	1B

15	09	0F	10	00	1B	1D	0A
75 u	69 i	6F o	70 p	60 `	7B {	7D }	0A
55 U	49 I	4F O	50 P	40 @	5B [	5D]	0A

0A	0B	0C	3B	3A	0D
6A j	6B k	6C l	2B +	2A *	0D
4A J	4B K	4C L	3B ;	3A :	0D

E	0D	2C	2E		09
5E n	6D m	3C <	3E >	SHIFT	09
4E N	4D M	2C ,	2E .		09

	20	3F	10
R	20	7F	10
	20	7F	10

SW5

Ñ - 5C
ñ - 7C

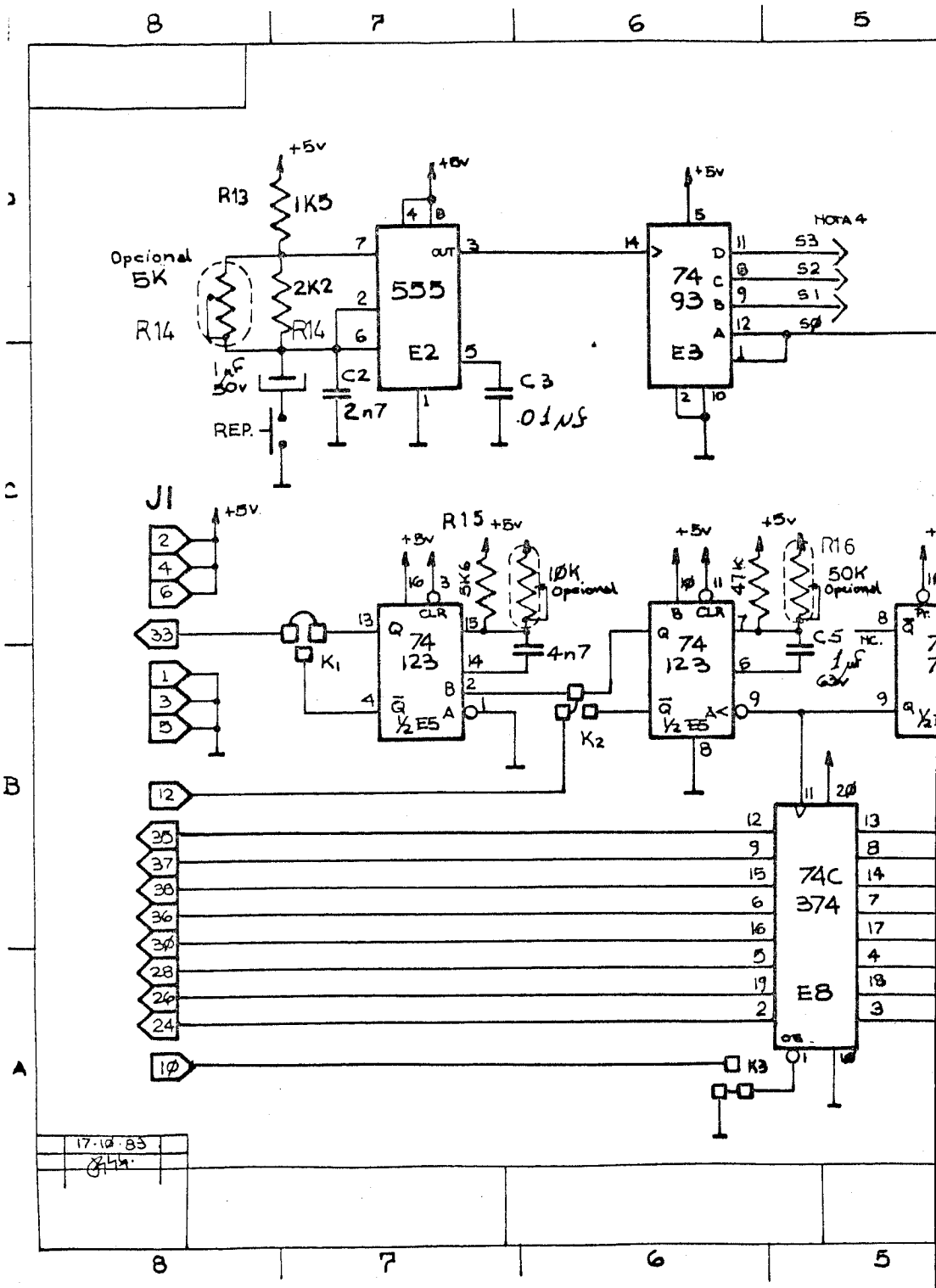

8
7
6
5
+5v
R13
1K5
Opcional
5K
R14
2K2
R14
1µF
50v
REP.
C2
2n7
555
E2
C3
.01µF
74
93
E3
NOTA 4
S3
S2
S1
SØ
J1
R15
5K6
1ØK
Opcional
4n7
74
123
½ E5
K1
K2
47K
R16
50K
Opcional
C5
1µF
63v
74C
374
E8
K3
17·1Ø·83

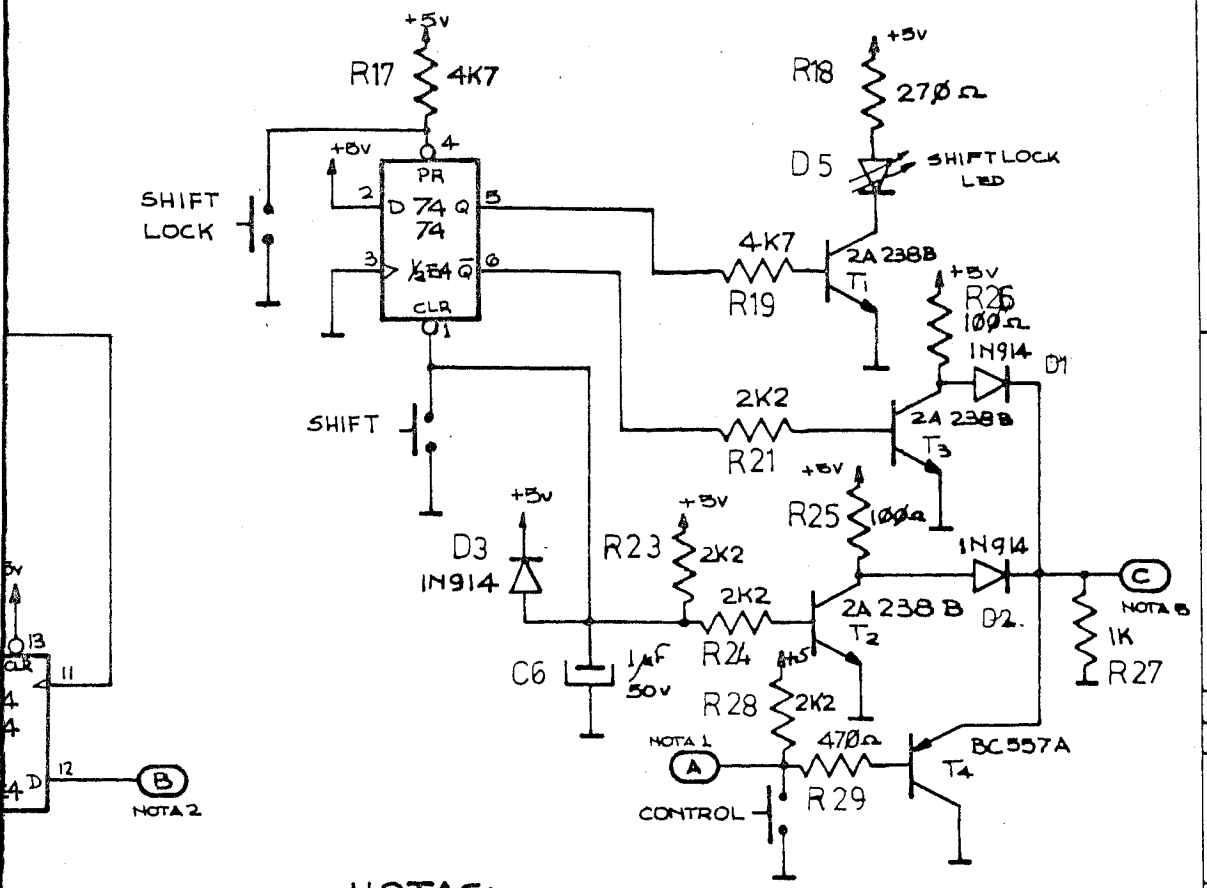

NOTAS:

1) Ver M7116/1-Ø (8D)
2) Ver M7116/1-Ø (1-C)
3) Ver M7116/1-Ø (7C)
4) Ver M7116/1-Ø (7B)
5) Ver M7116/1-Ø (8C)

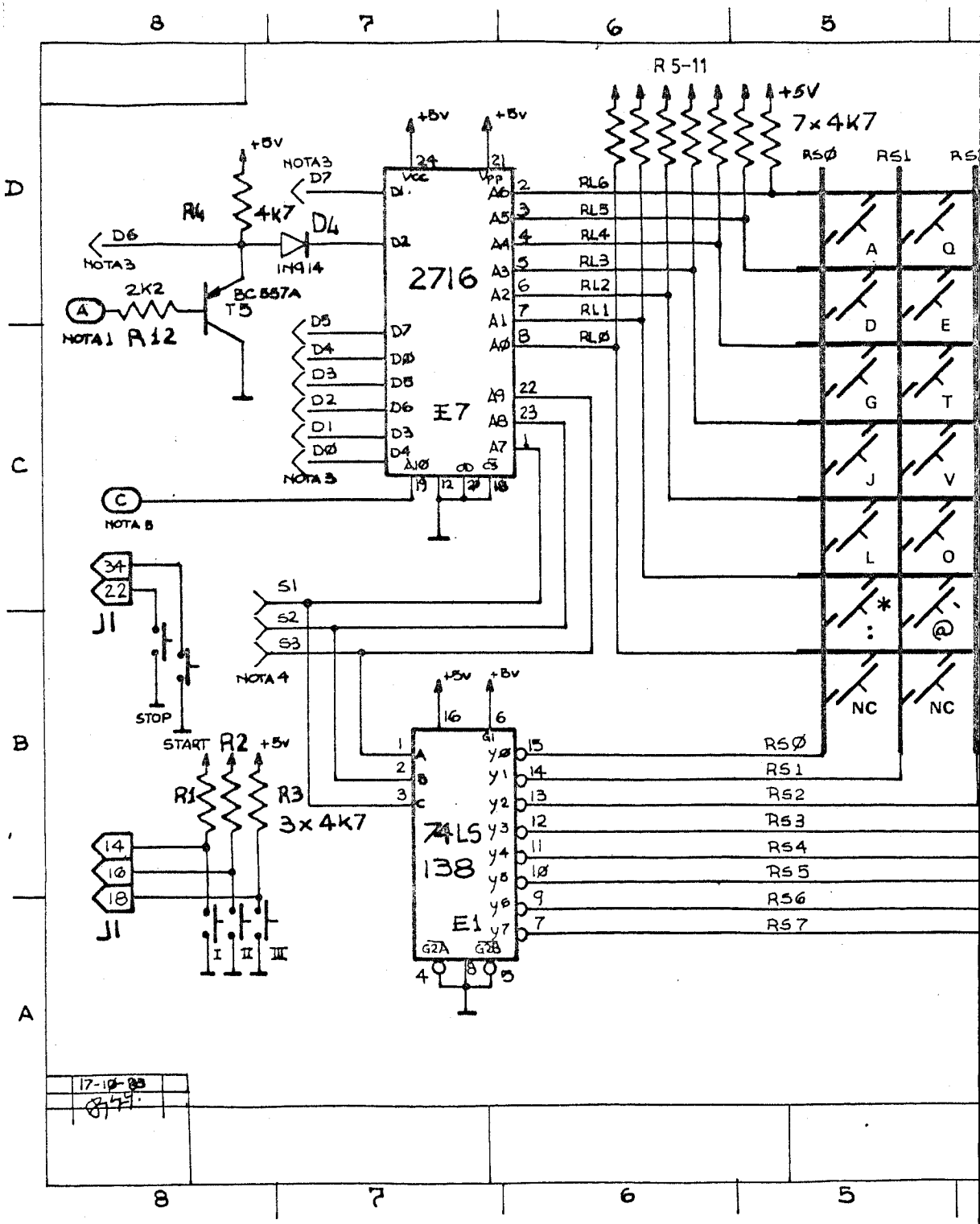

R 5-11
+5V
7×4K7
RSØ
RS1
RS
+5V
+5V
NOTA3
D7
R4
4K7
D4
D6
NOTA3
1N914
2K2
BC 557A
T5
NOTA1
R12
2716
E7
D5
D4
D3
D2
D1
DØ
NOTA 3
NOTA 5
RL6
RL5
RL4
RL3
RL2
RL1
RLØ
A
Q
D
E
G
T
J
V
L
O
NC
NC
S1
S2
S3
NOTA 4
J1
STOP
START
R2
+5V
R1
R3
3×4K7
J1
I
II
III
74LS
138
E1
RSØ
RS1
RS2
RS3
RS4
RS5
RS6
RS7
17-10-83

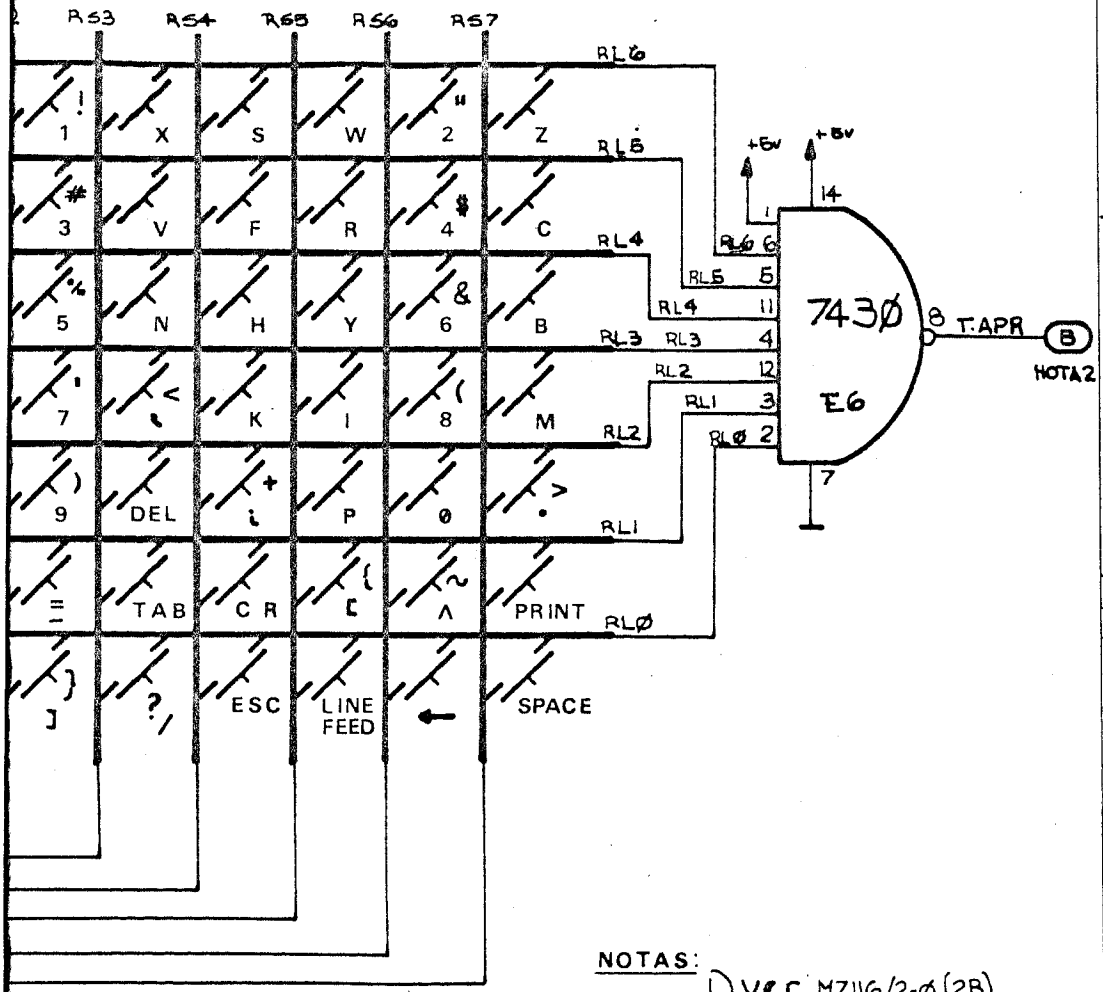

NOTAS:

1) ver M7116/2-Ø (2B)
2) ver M7116/2-Ø (4B)
3) a 74C 374, M7116/2-Ø (4A)
4) de 7493 (9,8,11); M7116/2-Ø (6D)
5) ver M7116/2-Ø (1C)